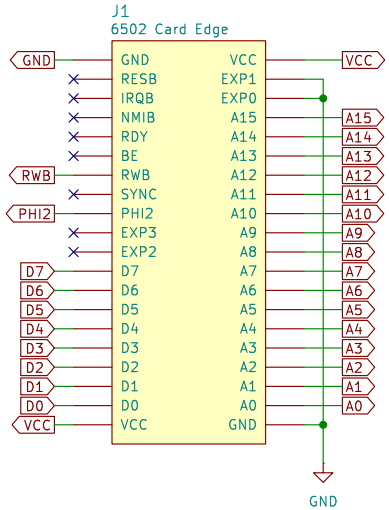


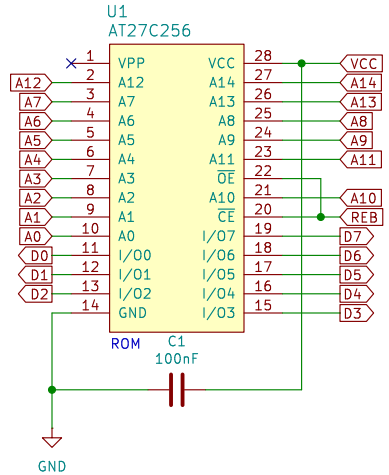


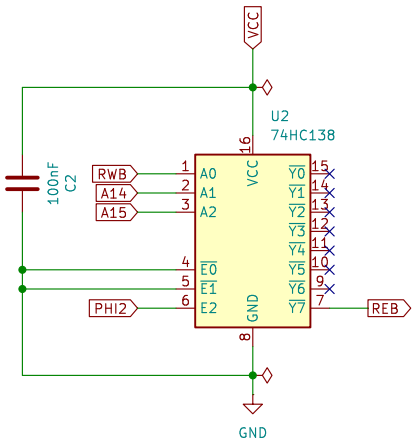


# 6502

**A.C. Wright Design**

Sheet: /
File: ROM Cart.kicad_sch

***Title: 6502 ROM Cart***

| | | |
|---|---|---|
| Size: USLetter | Date: 2026-03-22 | **Rev: 1.0** |
| KiCad E.D.A. 9.0.7 | | Id: 1/1 |